Division 3 - AFTER

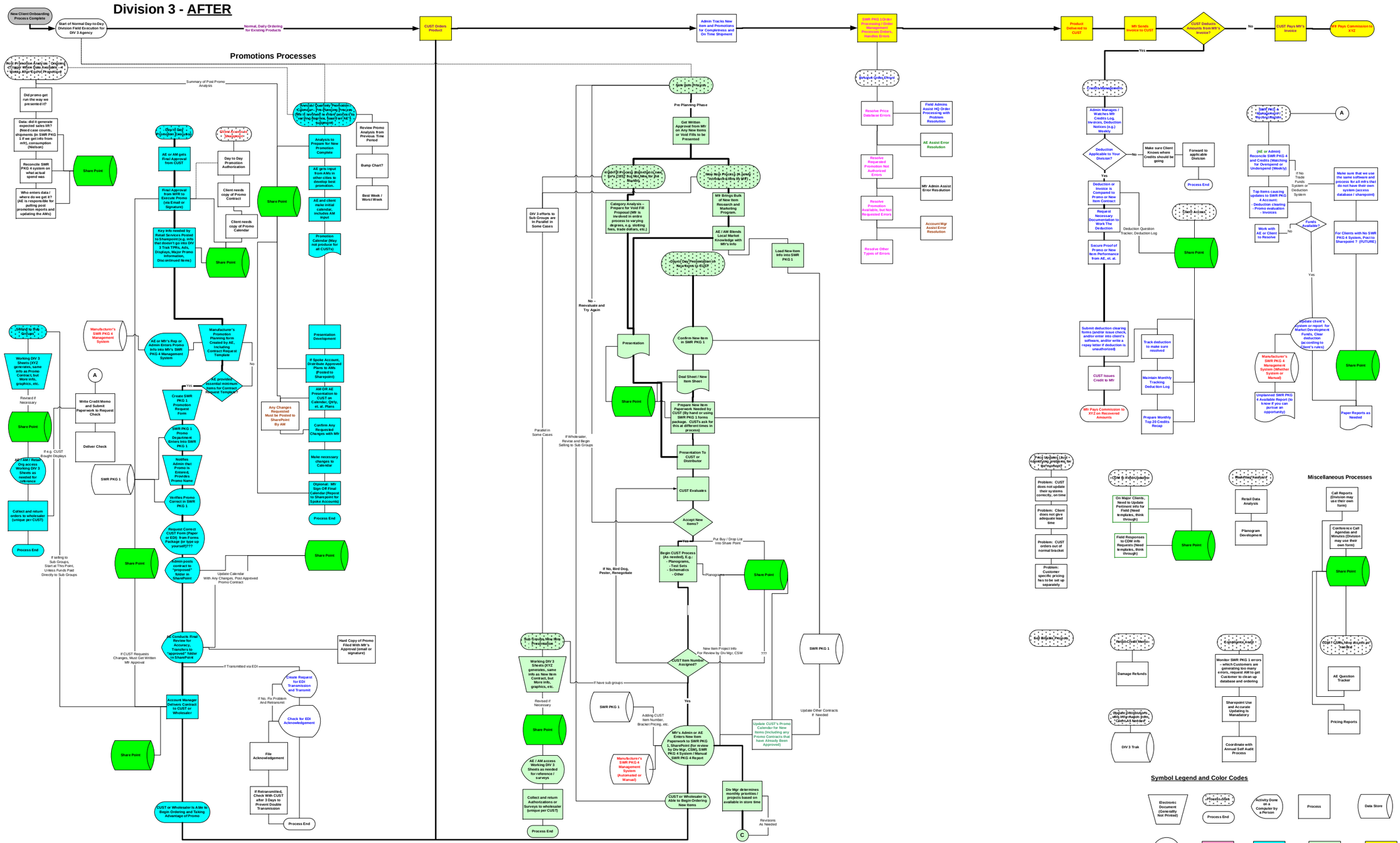

Copyright Tom Ingram & Associates, Inc. 2012